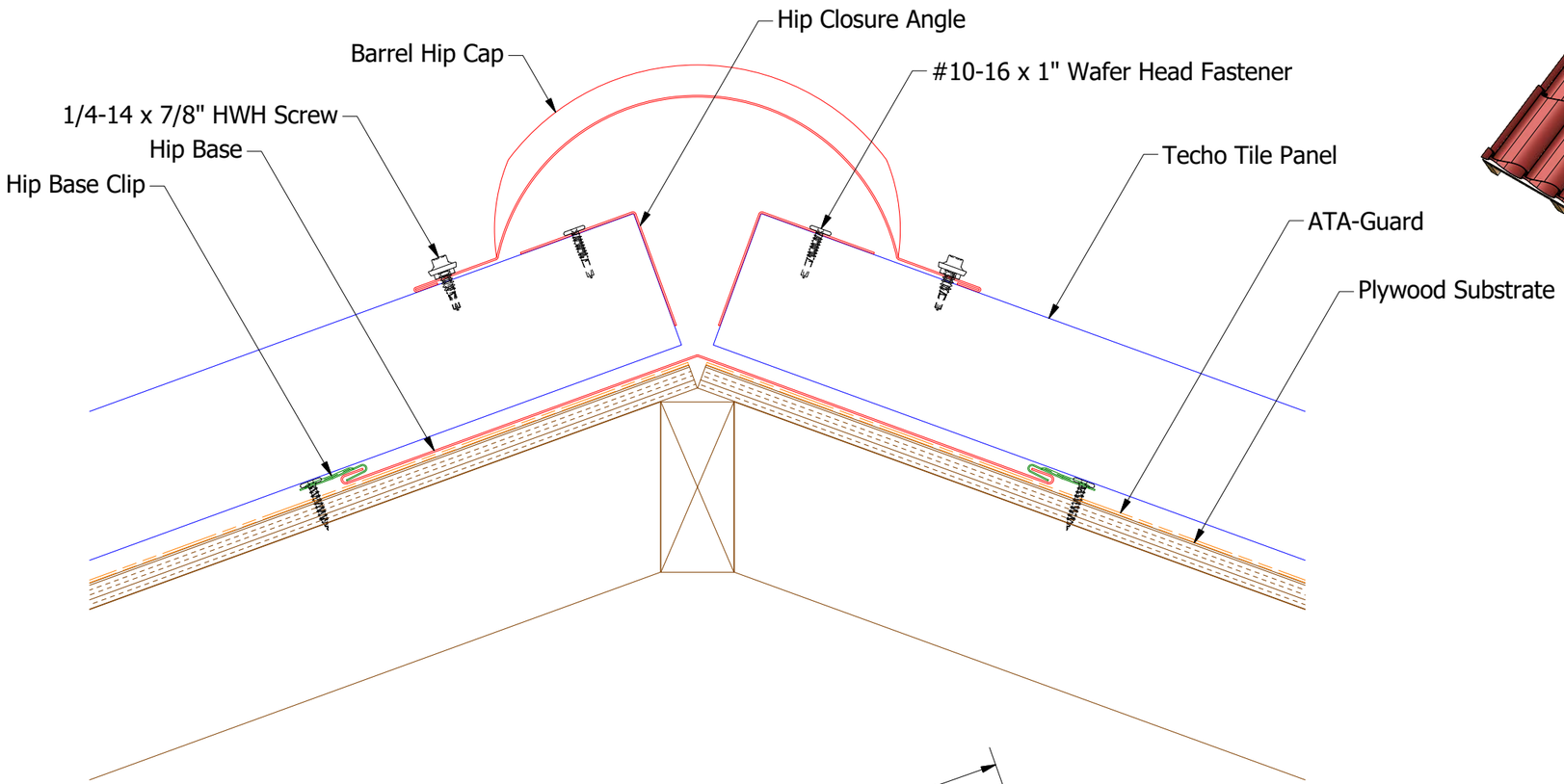

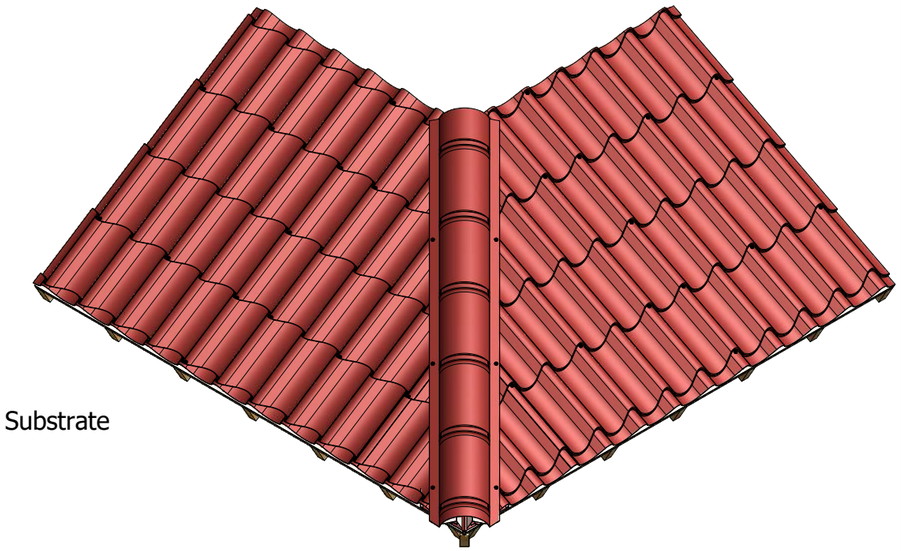

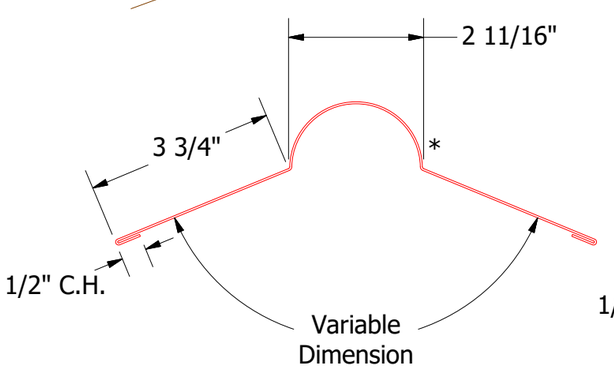

SCA303-Barrel Hip Cap
(Optional)

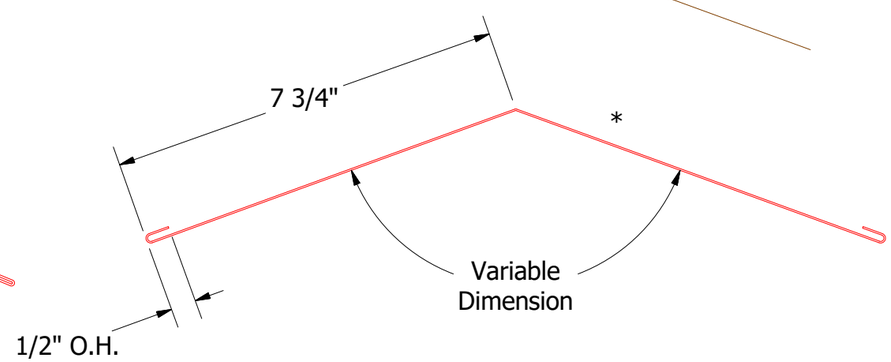

SCA372-Hip Base

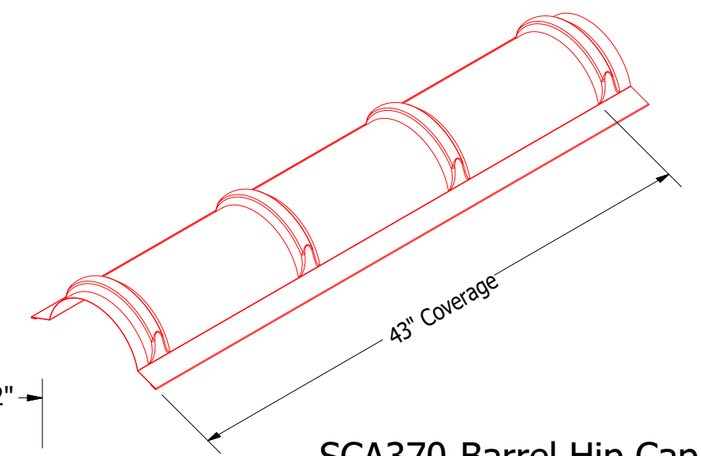

SCA370-Barrel Hip Cap
(Standard)

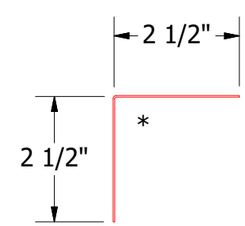

SCA371-Hip Closure Angle

Note: * denotes color side.

REV. NO.	DATE	DESCRIPTION OF REVISION	BY	APP
1	6/13/2019	Updated Substrate	AJZ	KRK

ATAS INTERNATIONAL, INC
Allentown PA
610-395-8445
Mesa AZ
480-558-7210

TITLE: Techo Tile Hip Detail

DWG. NO.

MATERIAL

DR: KRK — DATE: 12/5/2014

APP — DATE

SH. SIZE: B — SCALE: X:X